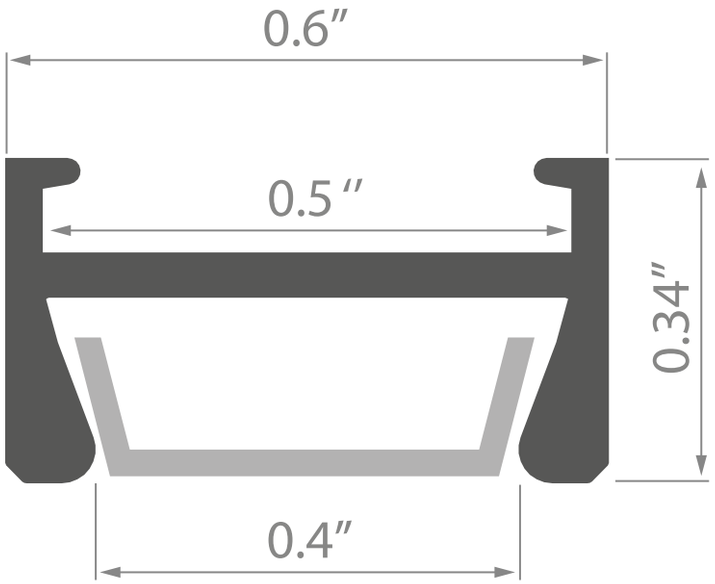
0.6″
0.5 ″
0.34″
0.4″